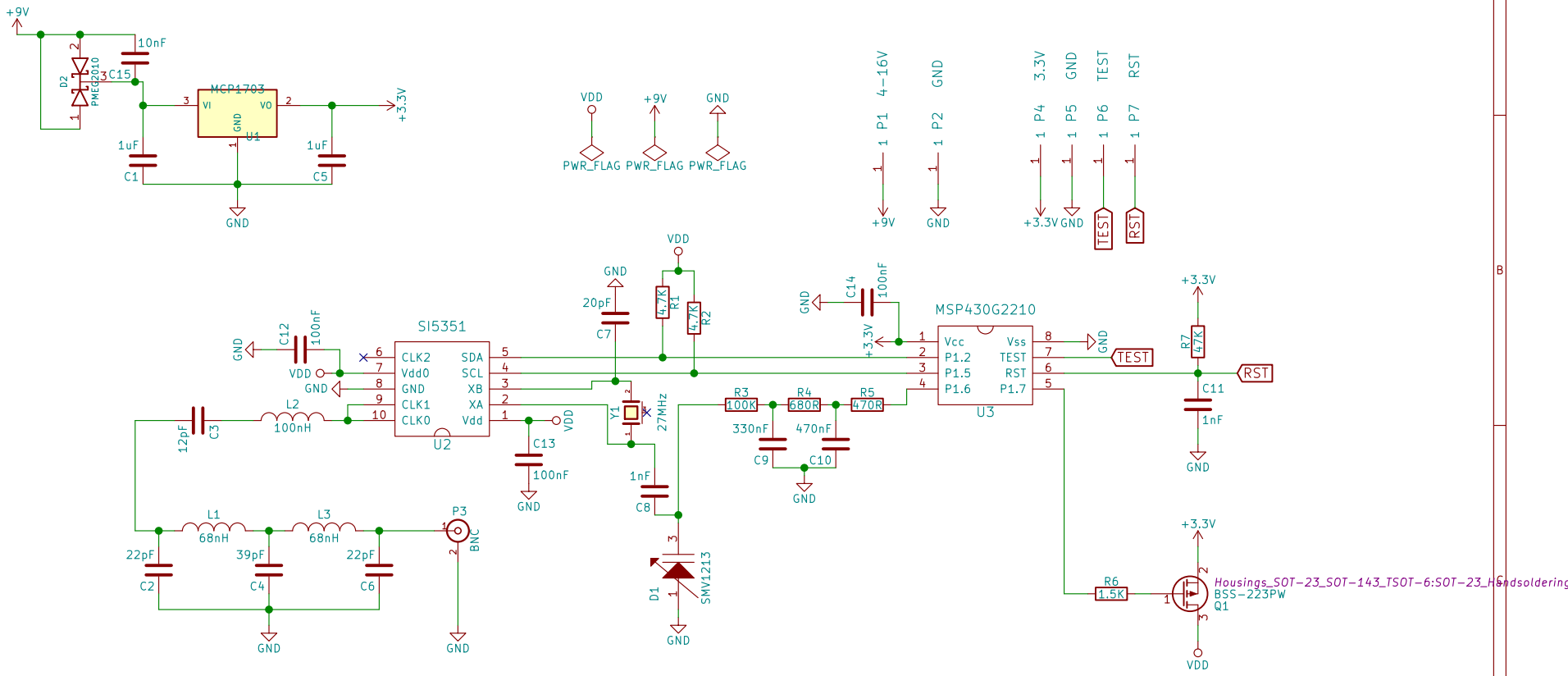

Sheet: /
File: TinyMorseBeacon.sch

Title:

Size: USLetter	Date:	Rev:
KiCad E.D.A. kicad 0.201508030901+604028ubuntu14.04.1-product		Id: 1/1