DRA818 Daughter Card

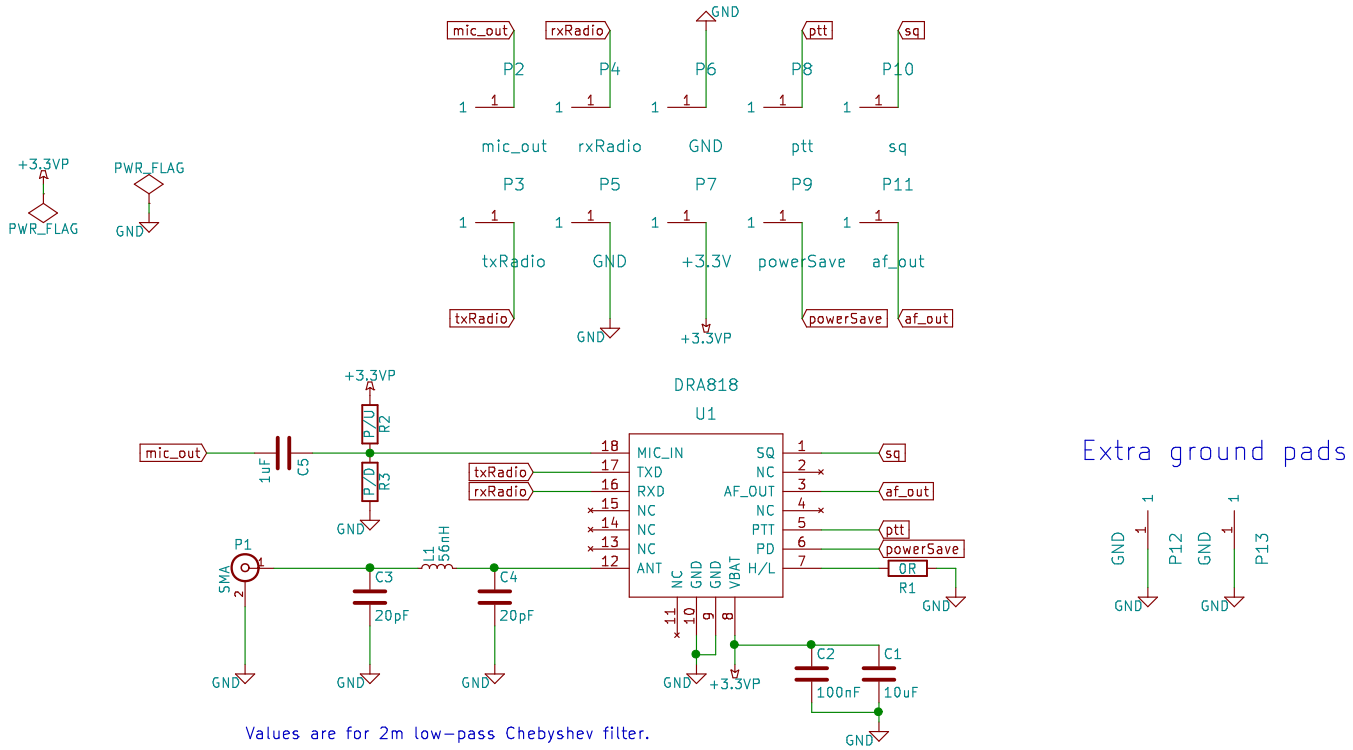

Values are for 2m low-pass Chebyshev filter.

For 70cm: C4=C5=6.8pF, L1=18nH

Extra ground pads

Sheet: /		
File: DRA818daughter.sch		
Title:		
Size: A4	Date:	**Rev:**
KiCad E.D.A. kicad 0.201507012246+585223ubuntu14.04.1-product		Id: 1/1