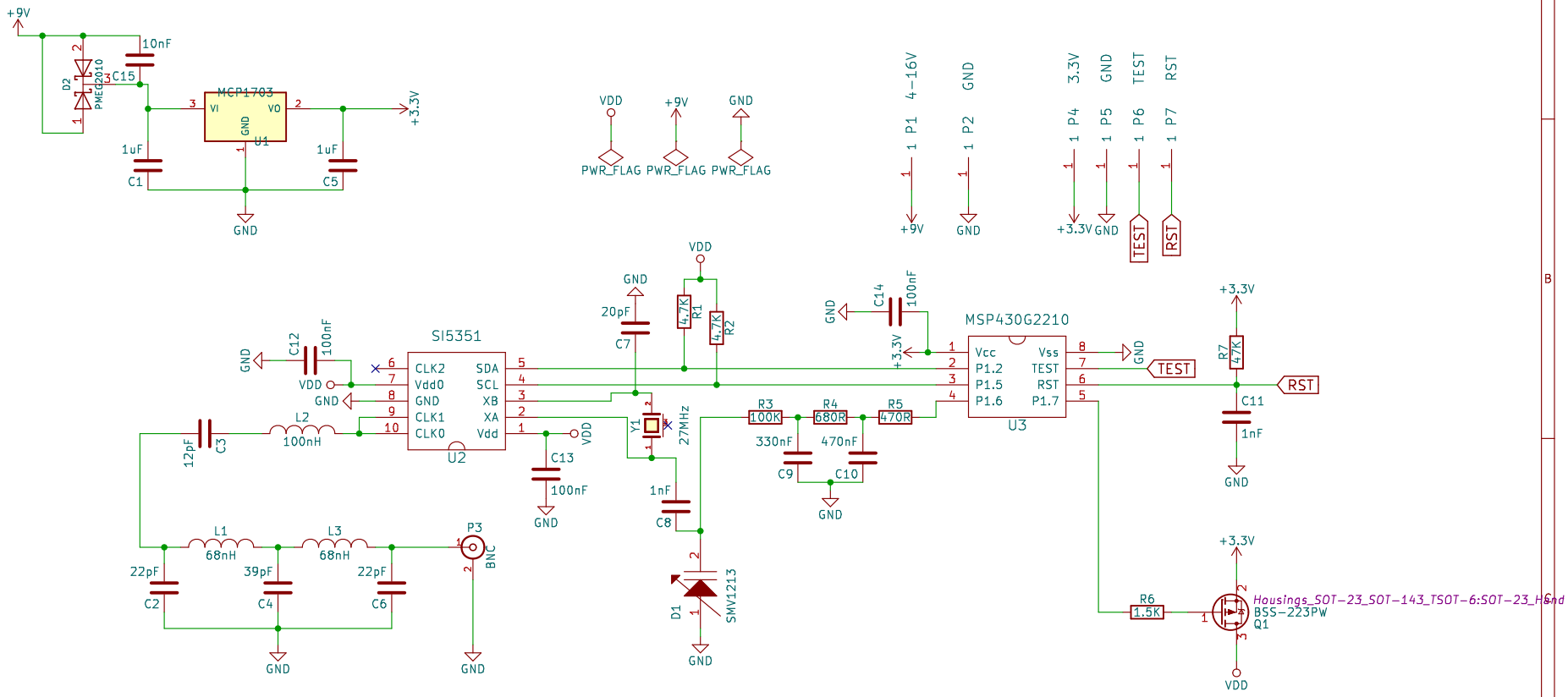

Sheet: /
File: TinyMorseBeacon.sch

Title:

Size: USLetter	Date:	Rev:
KiCad E.D.A. kicad 6.0.2+dfsg-1		Id: 1/1